saferoads

2026 Product Catalogue

saferoads.com.au

saferoads

Improving Public Safety

Saferoads have over 30 years experience in the public safety industry. We pride ourselves on being pioneers in the development of leading technology and solutions. Saferoads is an ASX listed company specialising in the provision of innovative road safety solutions throughout Australia, New Zealand and North America. We supply state government departments, local councils, road construction companies and equipment hire companies with a broad range of products and services designed to direct, protect and inform the public.

CONTENTS

Solar Lighting 04
Roadway Solar V-LED Light 06
Blade Solar Light Galvanised Pole 07
Blade Solar Light Telescopic Pole 08
Blade Solar Light Hinged Pole 09

Electronic Signs 10
Zone VMS Classic 12
Zone VMS Essential 13

Temporary Barriers 14
Mash Tested Barriers 16
HV2 Barrier 19
T-Lok Barrier 20
Ironman Hybrid Barrier 22
SLED End Terminal 23
Pedestrian Barriers 24
Big Blockout Barrier 26
Blockout Barrier 27
Rubber Guard Barrier 28
Safe-T Guard Barrier 29

Vehicle Mitigation 30
Rapid Stop Barrier 32
Rapid Stop Barrier Disabled Access 33
Rapid Stop Barrier Emergency Access 33

Security Bollards 34
OmniStop Super Duty 36
OmniStop Ultra 37
Inground Lockable Bollard 38
Surface Mount Lockable Bollard 38
Surface Mount Bollard 39

Guide Posts 40
SupaSteel Guide Post 42
SnapLoc Guide Post 44

Traffic Calming 46
Separation Kerb 48
Rumble Bars 49
Caterpillar Safe Cycle 50
Rubber Wheel Stop 51
Rubber Speed Humps 52
Rubber Speed Cushions 53
Rubber Kerbing 54
Kangou Sign 56
Roll Out Speed Hump 57

saferoads

Solar Lighting

Affordable to run and simple to install, our solar LED lights are the ideal choice for areas facing difficulty connecting to mains power.

Solar lighting is also a popular choice for environmentally conscious contractors and communities where safety, security and reducing carbon emissions is a critical part of the local government strategy.

Road Way Solar V-LED Light

Ideal Solar Lighting Solution

Permanent

2 Year Product Warranty

3 Year Battery Warranty

- 75W Australian approved V-LED Luminar
- 360W solar panel
- Built-in lithium-ion batteries
- Heavy duty aluminium frame
- Direct bury slip base pole
- Wind rating: Region A, B & C

Specifications

Product Code	Rating	Power	LED	Wattage	Light Head Body	Finishing	Pole Wall Thickness	Pole Grade
K20200106	IP66 IK06	360W Solar Panel	CREE	75W Aldridge V-LED	High Pressure Die Cast Aluminium	Powder Coated (std. grey)	7mm	GDE350

Please note: Saferoads Roadway Solar V-LED Light is mounted on a direct bury, slip base pole. The pole is to be installed in accordance with local road or power authority requirements. Typically the hole is to be backfilled with compacted layers of approved natural material, crushed rock or stabilised sand. An un-reinforced concrete pad at the bottom of the hole may be required to help prevent the pole sinking over time. Please refer to **saferoads.com.au** for the most up to date specifications

sales@saferoads.com.au | 1800 060 672

Blade Solar Light

Galvanised Pole

Permanent

2 Year Product Warranty

3 Year Battery Warranty

- Premium grade permanent commercial solar lighting
- 8m galvanised steel light pole
- Surface or in-ground mount options for easy installation
- Optional remote programmable smart lighting
- Massive 72Ah battery capacity (up to 12.8V)
- Wind rating: Region A, B & C

*Product image is for illustrative purposes only.

Specifications

Product Code	Efficiency	Lumens	Colour Temperature	CRI	Beam Angle	Weight	Battery Capacity	Light Output	Pole Height
K20200109	207lm/W	15525lm	5000K	Ra≥70	150° x 60°	24kg	12.8V/72Ah	75W	8m

Please refer to **saferoads.com.au** for the most up to date specifications

Blade Solar Light

Telescopic Pole

Portable | 2 Year Product Warranty | 3 Year Battery Warranty

- Premium grade commercial solar lighting
- Newly designed hot dip galvanised (SHS) telescopic pole
- Optional remote programmable smart lighting
- Massive 72Ah battery capacity (up to 12.8V)
- 3 base options rated to suit wind regions A, B & C
- The rotationally molded plastic base has an indented space for branding signage and can be customised to suit your business in a range of colours

Light Head Specifications

Product Code	Efficiency	Lumens	Colour Temperature	CRI	Beam Angle	Weight	Battery Capacity	Light Output
F20100200	207lm/W	15525lm	5000K	Ra≥70	150° x 60°	24kg	12.8V/72Ah	75W

Base Specification

Telescopic Pole	**Plastic Base** Wind Region A & B	**Single Concrete Block** Wind Region A	**Double Concrete Block** Wind Region B & C
Product Code	K20100202	K20100201	K20200112
Collapsed Overall Height	2.6m	2.6m	2.9m
Expanded Overall Height	6.6m	6.6m	6.9m
Base Weight	1080kg	650kg	1590kg
Overall weight of a complete light with telescopic mast	1220kg	790kg	1730kg

Please refer to **saferoads.com.au** for the most up to date specifications

sales@saferoads.com.au | 1800 060 672

Blade Solar Light
Hinged Pole

Portable | 2 Year Product Warranty | 3 Year Battery Warranty

- Premium grade commercial solar lighting
- Hinged galvanised steel 6m light pole
- Unique base with hinge design allows for ease of deployment
- Optional remote programmable smart lighting
- Massive 72Ah battery capacity (up to 12.8V)
- 3 base options rated to suit wind regions A, B and C
- The rotationally molded plastic base has an indented space for branding signage and can be customised to suit your business in a range of colours

Light Head Specifications

Product Code	Efficiency	Lumens	Colour Temperature	CRI	Beam Angle	Weight	Battery Capacity	Light Output
F20100200	207lm/W	15525lm	5000K	Ra≥70	150° x 60°	24kg	12.8V/72Ah	75W

Base Specification

Hinged Pole	**Plastic Base** Wind Region A & B	**Single Concrete Block** Wind Region A	**Double Concrete Block** Wind Region B & C
Product Code	K20100203	K20100200	K20200110
Overall Height	6.0m	5.8m	6.1m
Base Weight	1080kg	650kg	1590kg
Overall weight of a complete light with a hinged pole	1184kg	754kg	1694kg

Please refer to **saferoads.com.au** for the most up to date specifications

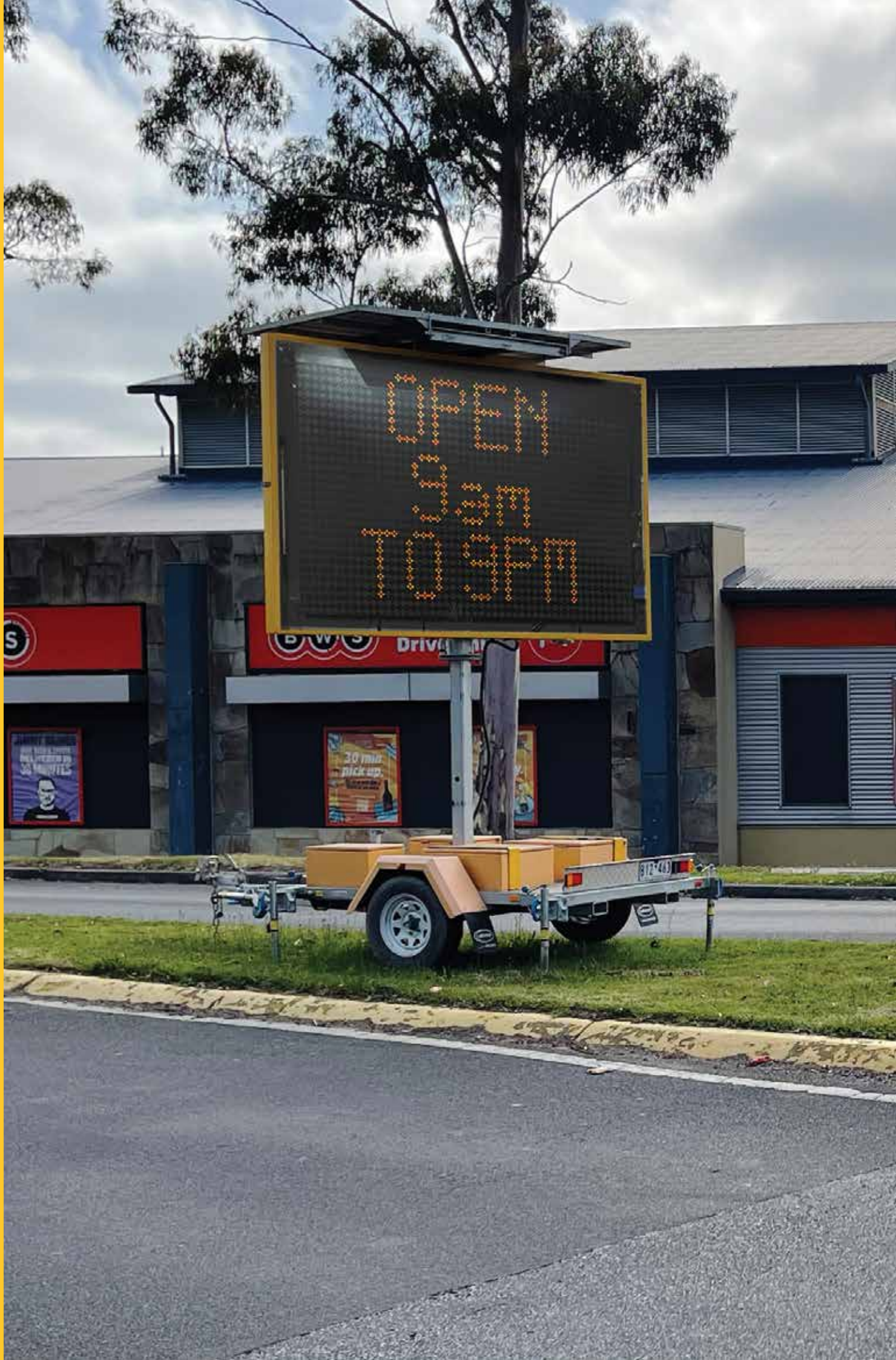
OPEN
9AM
TO 9PM
BWS
30 min pick up

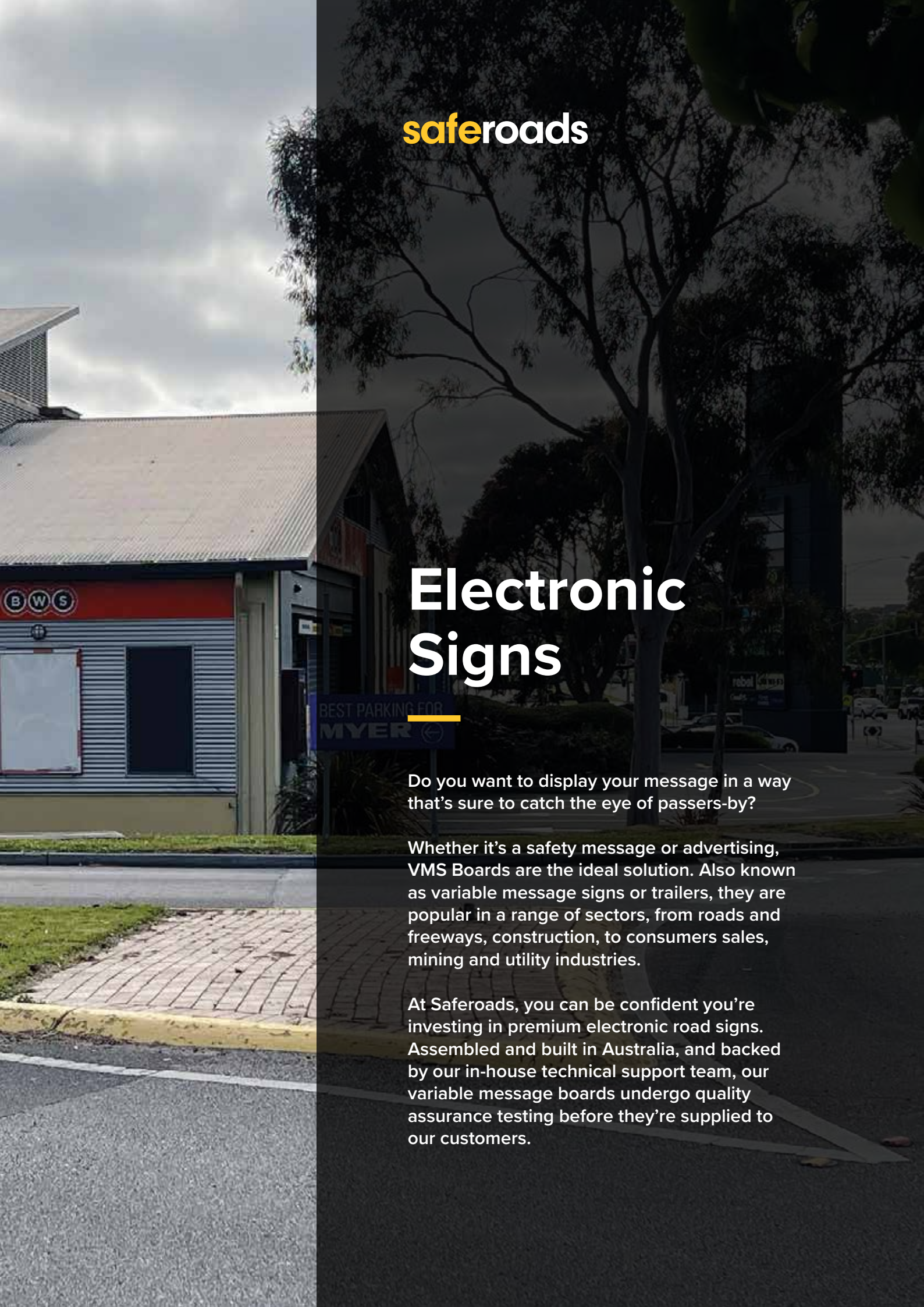

saferoads

Electronic Signs

Do you want to display your message in a way that's sure to catch the eye of passers-by?

Whether it's a safety message or advertising, VMS Boards are the ideal solution. Also known as variable message signs or trailers, they are popular in a range of sectors, from roads and freeways, construction, to consumers sales, mining and utility industries.

At Saferoads, you can be confident you're investing in premium electronic road signs. Assembled and built in Australia, and backed by our in-house technical support team, our variable message boards undergo quality assurance testing before they're supplied to our customers.

Zone VMS Classic

Communicate Promotional or Traffic Control Messages

C Size VMS

Hybrid Model Available

- Australian designed and built C-Size VMS
- Amber or five colour (blue, green, amber, red and white) options
- Heavy duty, fully galvanised and powder coated
- 4 x 12V 200AH batteries with on board battery charger
- 3 x 200W solar panels that tilt and rotate
- 100% Australian developed, owned and hosted, Zone 2 online management platform
- 24/7 Australian support
- Easy to use internet platform accessible from any browser/smartphone/tablet device
- On board message manager
- Fully sealed tool boxes with gas struts (x4)
- Checker plate floor and spare wheel
- Box security brackets (optional)
- Available as a hybrid model with no tilt and rotate on the solar panels

Specifications

Product Code	Weight (TARE)	ATM	Length Overall	Width Overall	Height Travelling	Deployed Footprint Length	Deployed Footprint Width	Max Deployed Height	No. of 12V 200AH Batteries	No. of 200W Solar Panels
Amber F1504001C	1180kg	1500kg	3650mm	2080mm	2930mm	3650mm	2725mm	5300mm	4	3
Colour F1504001P	1180kg	1500kg	3650mm	2080mm	2930mm	3650mm	2725mm	5300mm	4	3

Please refer to **saferoads.com.au** for the most up to date specifications

sales@saferoads.com.au | 1800 060 672

Zone VMS Essential

Advertise your Business or Event with Ease

C Size VMS

- Australian designed and built C-Size VMS
- Amber or five colour (blue, green, amber, red and white) options
- Heavy duty, fully galvanised and powder coated
- 12V 200AH batteries (Amber x 2, Colour x 3)
- 2 x 200W solar panels
- 100% Australian developed, owned and hosted, Zone 2 online management platform
- 24/7 Australian support
- Easy to use internet platform accessible from any browser/smartphone/tablet device
- On board message manager (optional)
- Fully sealed tool boxes (x2)
- Checker plate floor and spare wheel (optional)
- Box security brackets (optional)

Specifications

Product Code	Weight (TARE)	ATM	Length Overall	Width Overall	Height Travelling	Deployed Footprint Length	Deployed Footprint Width	Max Deployed Height	No. of 12V 200AH Batteries	No. of 200W Solar Panels
Amber F1504001E	800kg	1500kg	3670mm	2080mm	2850mm	3670mm	2725mm	4200mm	2	2
Colour F1504001EC	860kg	1500kg	3670mm	2080mm	2850mm	3670mm	2725mm	4200mm	3	2

Please refer to **saferoads.com.au** for the most up to date specifications

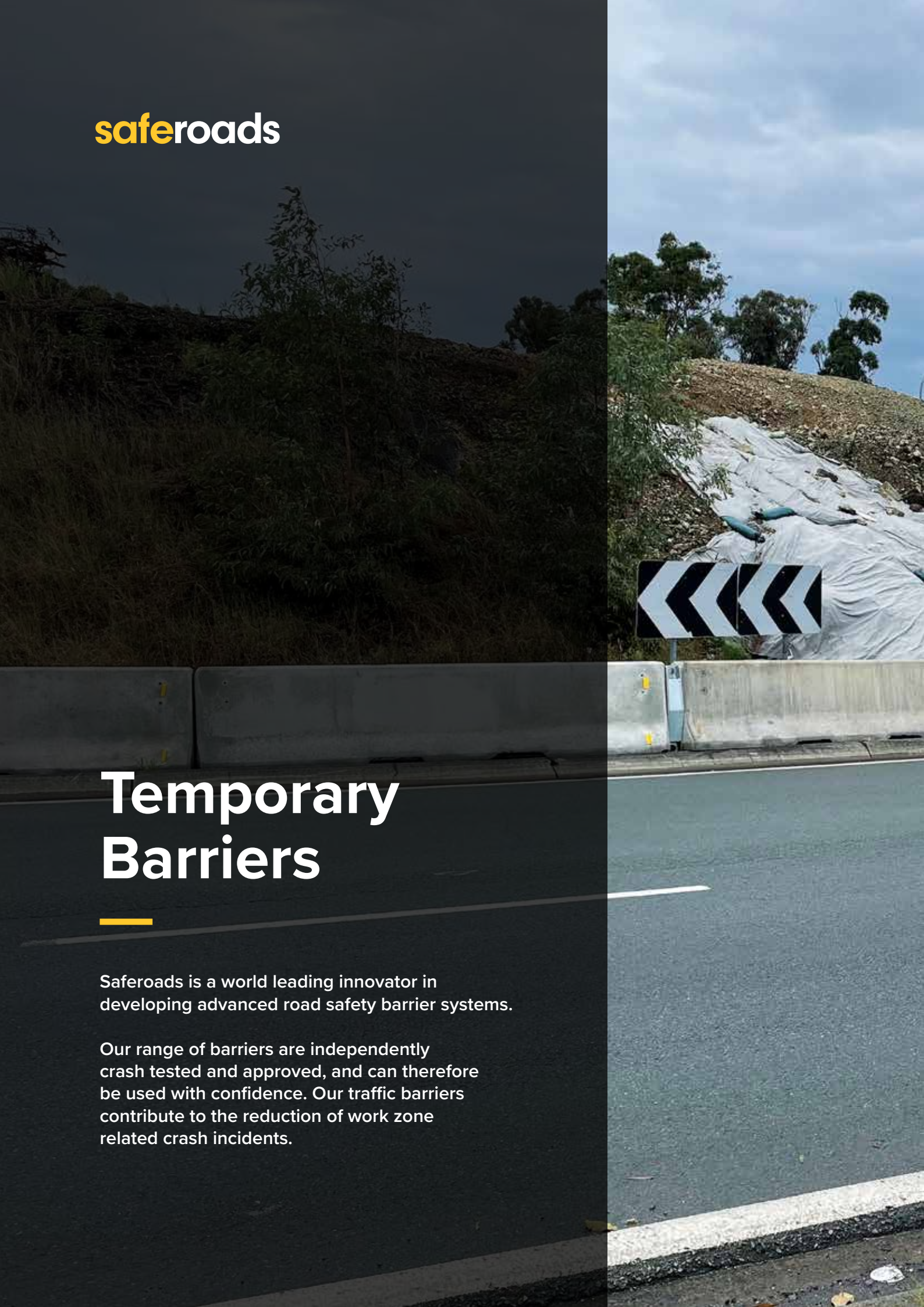

saferoads

Temporary Barriers

Saferoads is a world leading innovator in developing advanced road safety barrier systems.

Our range of barriers are independently crash tested and approved, and can therefore be used with confidence. Our traffic barriers contribute to the reduction of work zone related crash incidents.

saferoads

MASH Tested Barriers

Saferoads crash barriers are independently crash tested to MASH guidelines and can therefore be used with confidence.

Saferoads MASH compliant barriers redirect errant vehicles, contributing to the reduction of work zone related crash incidents.

Saferoads MASH Tested Barriers

Saferoads is regarded as an industry expert in the safety barrier sector and has designed and manufactures industry leading barriers, the HV2, Ironman Hybrid and T-Lok Barriers, which are specifically designed for road conditions. Saferoads MASH tested Temporary Barriers can be used in many applications such as, road maintenance, resurfacing and construction, lane closures, detours and bridge repairs.

MASH Barrier Comparison	HV2 Barrier	T-Lok Barrier 3.66m	T-Lok Barrier 5.49m	Ironman Hybrid Barrier
Effective Length	5.8m	3.66m	5.49m	4.15m
Height	900mm	810mm	810mm	813mm
Width	450mm	610mm	610mm	546mm
Weight per unit	2088kg	2600kg	3900kg	925kg
Successfully Crash Tested To	MASH TL-4	MASH TL-3	MASH TL-3	MASH TL-2
ASBAP Approved	100 km/h	100 km/h	100 km/h	70 km/h
Deflection	1.47m MASH TL-3 2.37m MASH TL-4 MDS 0.12m MASH TL-3	1.27m MASH TL-3	1.27m MASH TL-3	1.49m MASH TL-2
Minimum Radius	80m	30m 8m with Wedge	46m 12m with Wedge	78m 10m with Wedge
High Containment	✓	✓	✓	X
Economical to Transport	✓	X	X	✓
Durable	✓	X	X	✓
Amount Transportable by Semi-Truck	10	9	6	24 stacked in two layers

Please refer to **saferoads.com.au** for the most up to date specifications

End Treatments

Temporary barrier deployments require an end treatment. These are crash cushions designed to be attached to the end of safety barrier alignment in order to absorb the impact of vehicle collisions.

There are a range of different end treatment options available;

- **Unanchored** - which move with the force of the collision
- **Non-redirectional** - which aren't designed to divert a colliding vehicle
- **Non-gating** - which won't envelop the vehicle
- **Fully re-directional** - which divert a colliding vehicle to a safer location

HV2 Barrier

MASH TL-4 Unanchored Barrier

MASH TL-4 | ASBAP 100km/h | High Containment

- HV2 Barrier has ASBAP approval to 100km/h
- First and only unanchored steel barrier to successfully be crash tested to MASH TL-4
- High containment and low deflection upon impact
- Lightweight and economical to transport
- Rapid deployment and retrieval
- Multiple end treatments can be used, approved with SLED and QuadGuard M10 CZ

Specifications

Product Code	Effective Length	Width	Height	Weight Per Unit	Weight Per Metre	Successfully Tested To	ASBAP Approval	Deflection	Transportable Per Semi Truck
F1304028	5.8m	450mm	900mm	2088kg	360kg	MASH TL-4	100km/h	1.47m MASH TL-3 2.37m MASH TL-4	10 units

Please refer to **saferoads.com.au** for the most up to date specifications

HV2 Minimum Deflection System (MDS) Barrier

The HV2 MDS Barrier delivers enhanced protection in space-restricted environments, with exceptionally low dynamic **deflection. Building on the proven HV2 Barrier design, it features a patented hybrid system and specialised anchoring at every 5.8m joint to minimise movement during vehicle impact and maximise stability.**

- MASH TL-3 approved
- ASBAP approval to 100km/h
- Low dynamic deflection of just 0.12m
- Narrow 450mm system width
- Working width of 0.69m
- Fast deployment and retrieval
- High containment and controlled vehicle redirection
- Compatible with various end treatments

HV2 Pinning Kit Specifications	Product Code	Deflection	ASBAP Approval
	K1304044	0.12m MASH TL-3	100km/h

Please refer to **saferoads.com.au** for the most up to date specifications

Product Approvals

Saferoads HV2 Barrier is approved for use by Austroads, Department of Transport (Vic Roads), Transport for NSW, Department of Main Roads QLD, Main Roads WA and New Zealand Transport Agency Waka Kotahi

T-Lok Barrier

MASH TL-3 Longitudinal Barrier

MASH TL-3

ASBAP 100km/h

Wedge for tight radius projects

- T-Lok Barrier has ASBAP approval to 100km/h
- Freestanding, temporary longitudinal barrier system successfully crash tested to MASH TL-3
- Low deflection and safe re-direction
- Available in either 3.66m or 5.49m lengths
- Multiple end treatments can be used
- Sight/debris screens bolt on
- Can be deployed with steel wedge to accommodate tight radius projects

Specifications

Product Code	Effective Length	Width	Height	Weight Per Unit	Weight Per Metre	Successfully Tested To	ASBAP Approval	Deflection	Transportable Per Semi Truck
F1303000	3.66m	610mm	810mm	2600kg	722kg	MASH TL-3	100km/h	1.27m MASH TL-3	9 units
F1303001	5.49m	610mm	810mm	3900kg	722kg	MASH TL-3	100km/h	1.27m MASH TL-3	6 units

Please refer to **saferoads.com.au** for the most up to date specifications

Steel Wedge Radius Solution for T-Lok Barriers

- Facilitates placement of T-Lok Barriers at tighter radii
- Enables the 3.66m barrier to be deployed on a radius as tight as 8m
- Enables the 5.49m barrier to be deployed on a radius as tight as 12m
- The wedge has ASBAP approval to 60km/h
- 5m design deflection where wedges are used

Wedge Specifications

Product Code	Width	Height	Weight Per Unit	ASBAP Approval
F130400	44-148mm	810mm	60.4kg	60km/h

Please refer to **saferoads.com.au** for the most up to date specifications

Product Approvals

Saferoads T-Lok Barrier is approved for use by Austroads, Department of Transport (Vic Roads), Transport for NSW, Department for Infrastructure and Transport SA, Department of Main Roads QLD, Main Roads WA.

sales@saferoads.com.au | 1800 060 672

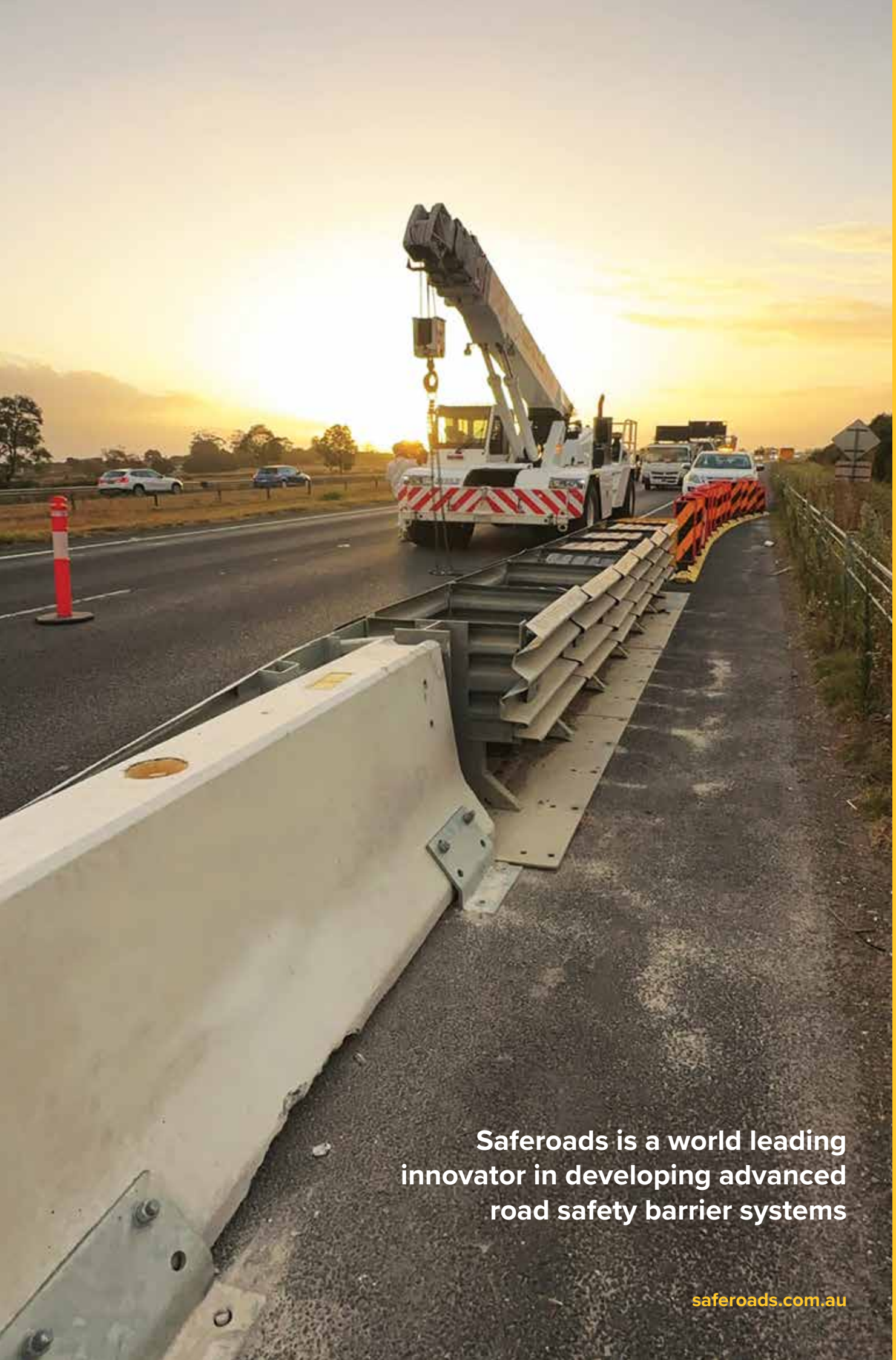

Saferoads is a world leading innovator in developing advanced road safety barrier systems

saferoads.com.au

Ironman Hybrid Barrier

Crash Tested and Free Standing

MASH TL-2

ASBAP 70km/h

Wedge for tight radius projects

- Ironman Hybrid Barrier has ASBAP approval to 70km/h
- Free standing, temporary longitudinal barrier system successfully crash tested to MASH TL-2
- Safe redirection
- Fast deployment and retrieval
- Approved with freestanding SLED End Treatment
- Lightweight and economical to transport
- Can be deployed with steel wedge to accommodate tight radius projects

Specifications

Product Code	Effective Length	Width	Height	Weight Per Unit	Weight Per Metre	Successfully Tested To	ASBAP Approval	Deflection	Transportable Per Semi Truck
F13200035	4.15m	546mm	813mm	925kg	225kg	MASH TL-2	70km/h	1.49m MASH TL-2	24 stacked in two layers

Please refer to **saferoads.com.au** for the most up to date specifications

Steel Wedge Radius Solution for Ironman Hybrid Barriers

- Facilitates placement of Ironman Hybrid Barriers at tighter radii
- Enables the Ironman Hybrid Barrier to be deployed on a radius as tight as 10m
- The wedge has ASBAP approval to 60km/h
- 5m design deflection where wedges are used

Wedge Specifications

Product Code	Width	Height	Weight Per Unit	ASBAP Approval
F13020/7	144-285mm	814mm	79.4kg	60km/h

Please refer to **saferoads.com.au** for the most up to date specifications

Product Approvals

Saferoads Ironman Hybrid Barrier is approved for use by Austroads, Department of Transport (Vic Roads), Transport for NSW, Department for Infrastructure and Transport SA and Department of Main Roads QLD.

sales@saferoads.com.au | 1800 060 672

SLED End Terminal

MASH TL-3 Compliant End Treatment

MASH TL-3

ASBAP 80km/h

- SLED End Terminal has ASBAP approval to 80km/h
- The Sentry Longitudinal Energy Dissipater (SLED) end terminal is a narrow, non re-directive gating crash cushion
- Designed to shield the end of various temporary barriers
- Unique design incorporates four internal steel cables which help envelop the impacting vehicle, reducing the possibility of secondary accidents
- Easily replaced after impact, nose and transition can be reused after most impacts
- Fast deployment and retrieval
- Durable, water filled, anchor free system

Specifications

Product Code	TL-3 Length	Width	Height	Successfully Tested To	ASBAP Approval	Material	Fill
F1304016	7.7m	685mm	1067mm	MASH TL-3	80km/h	UV Stabilized Polyethylene	Water

Please refer to **saferoads.com.au** for the most up to date specifications

Speed Configuration

Please note: Approval to 80km/h only in all Australian States

TL-1 Configuration	TL-2 Configuration	TL-3 Configuration
Up to 50km/h *(31mph)* Length: 3.85m	Up to 70km/h *(43mph)* Length: 5.77m	Up to 100km/h *(62mph)* Length: 7.7m

Product Approvals

Saferoads SLED End Terminal is approved for use by Austroads, Department of Transport (Vic Roads), Transport for NSW, Department for Infrastructure and Transport SA, Department of Main Roads QLD, Main Roads WA and New Zealand Transport Agency Waka Kotahi.

saferoads

Pedestrian Barriers

Saferoads have a range of effective, non-tested delineation barriers to suit every project.

Our range of rubber, concrete and plastic water filled safety barriers act as a protective boundry and can be used for lower speed and offline sections of work areas that require separation from pedestrians or ongoing traffic. Pedestrian barriers can be moved around as needed on site.

Big Blockout Barrier

Durable Water Filled Barrier System

Non Tested

Water Filled

- Australian designed and manufactured
- Water filled barrier system for non tested applications, including site work, delineation, shielding or low speed and offline sections of work areas that require separation from pedestrians
- Extra durable and robust
- Highest quality plastic barriers available
- Segments are 2.2m in length with 8mm wall thickness
- Available in a range of bright colours for high visibility on-site
- Innovative tapered interlocking tabs are efficient to use
- Convenient to deploy and user friendly to stack
- Each join allows for 300 degree angling

Specifications

Product Code	Overall Length	Installed Length	Width	Height	Height of 2 units stacked	Wall Thickness	Weight (Empty)	Weight (Full)	Water Ballast
F1301709	2200mm	2050mm	390mm	940mm	1840mm	8mm	38kg	488kg	450L

Please note: This is not a crash tested barrier. Please refer to **saferoads.com.au** for the most up to date specifications

sales@saferoads.com.au | 1800 060 672

Blockout Barrier

Lightweight and Stackable

Non Tested

Water Filled

- Water filled barrier system for non-tested applications
- Delineation device for pedestrian or vehicle separation
- Lightweight, easy to transport and install
- Available in bright red and white
- Each join allows for over 240 degree angling
- Stackable
- Interlocking tabs

Specifications

Product Code	Overall Length	Installed Length	Width	Height	Height of 2 units stacked	Wall Thickness	Weight (Empty)	Weight (Full)	Water Ballast
Red K1301700	1660mm	1.5m	390mm	940mm	1892mm	3mm	15kg	268kg	250L
White K1301701									

Please note: This is not a crash tested barrier. Please refer to **saferoads.com.au** for the most up to date specifications

Rubber Guard Barrier

Durable Recycled Rubber Barrier

Non Tested

Recycled Rubber

For every 500m of Rubber Guard Barrier produced 92 tonnes of recycled tyres are used - equivalent to 15,300 passenger tyres

- Manufactured locally using 85% recycled rubber crumb
- Combats waste, reduces landfill emissions and contributes to a circular economy
- Fast, efficient deployment and retrieval
- Rubber increases the durability of the barrier increasing its lifespan
- Does not need to be filled with water, avoiding the need to dispose of waste water

Specifications

Product Code	Length	Width	Height	Weight	Weight Per Metre	Amount Transportable Per Semi Truck
F1305000	1.83m	610mm	810mm	400kg	216kg	56 stacked in two layers

Please note: This is not a crash tested barrier. Please refer to **saferoads.com.au** for the most up to date specifications

sales@saferoads.com.au | 1800 060 672

Safe-T Guard Barrier

Concrete Pedestrian Barrier

NEW Product | Non Tested | Concrete

- Concrete barrier system suitable for non-tested applications
- Separate vehicle traffic from pedestrians and protect building assets from deliberate vehicle impacts
- An alternative to steel bollards that provides high strength portable protection
- Dedicated lifting points allow for efficient deployment and movement around site using a forklift
- Sight/debris screens bolt on (optional) . Screens can be customised to offer branded signage

Specifications

Product Code	Length	Width	Height	Weight	Weight Per Metre	Amount Transportable Per Semi Truck
F1303700	1830mm	610mm	810mm	1300kg	722kg	18 in a single layer

Please note: This is not a crash tested barrier. Please refer to **saferoads.com.au** for the most up to date specifications

saferoads

Vehicle Mitigation

Major events take place throughout Australia every year and draw huge crowds of people which can be a target for terrorism as well as being difficult to evacuate in case of other emergencies.

The Rapid Stop Barrier is the perfect solution; it stops vehicles in their tracks and is fully portable. It offers event managers an innovative way to protect the public from terrorists and errant drivers, without interfering with pedestrian activity.

Security Licence Number: 000110687

Rapid Stop Barrier

Crash Tested Pedestrian Protection

Crash Tested

Portable

- Portable protection for pedestrian dense areas, events and worksites
- Proven to safely stop vehicles impacting from any angle
- Allows for pedestrian movement
- Fully crash tested with a 2270kg vehicle at 60km/h (MASH compliant)
- Non-lethal to occupants of impacting vehicle
- Barriers can be used individually or as a combined system with Disabled Access or Emergency Gate modules

Specifications

Product Code	Installed Length	Unit Length	Unit Width	Unit Height (Bollard)	Unit Height (Base)	Weight	Footing
F1202046F	3000mm	3088mm	1150mm	1086mm	130mm	1250kg	Freestanding No footing requirements

Please refer to **saferoads.com.au** for the most up to date specifications

Crash Tested for Superior Protection

The Rapid Stop Barrier has been thoroughly crash tested to ensure it provides superior protection. The crash test results show the Rapid Stop Barrier will contain an errant vehicle, whether intentional or accidental, preventing a hostile vehicle entering a pedestrian dense area, thereby reducing the risk of injury and death.

5 Units

Installed length of Barriers
15m (5 x 3m segments)

2270kg 4x4 Dual Cab Pickup, 57km/h, 90°

PAS Rating: N1G – 48

Deflection: 3.52m

3 Units with Gate

Installed length of Barriers
9m (3 x 3m segments)

2270kg 4x4 Dual Cab Pickup, 52km/h, 90°

PAS Rating: N1G – 48

Deflection: 8.4m

2 Units (Simulated)

Installed length of Barriers
6m (2 x 3m segments)

2270kg 4x4 Dual Cab Pickup 60km/h, 90°

PAS Rating: N1G – 48

Deflection: 11.3m

1 Units

Installed length of Barriers
3m (1 x 3m segments)

2270kg 4x4 Dual Cab Pickup 59km/h, 90°

PAS Rating: N1G – 48

Deflection: 15.7m

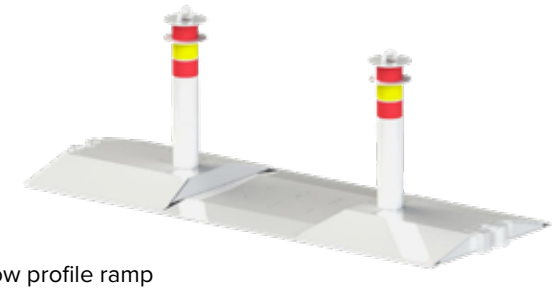

Rapid Stop Disabled Access

- Rapid Stop Barriers Disabled Access module is an unobtrusive, low profile ramp that allows easy access for wheelchairs or prams
- Disabled Access modules can be strategically placed in a deployment of standard barriers to allow for wheelchair access throughout the system
- The inclusion of the Disabled Access module ensures an event is inclusive and accessible to everyone, whilst maintaining maximum security and prevention of unauthorised vehicle entry
- Can be used standalone with additional end plates

Disabled Access Module Specifications

Product Code	Installed Length	Unit Length	Unit Width	Unit Height (Bollard)	Unit Height (Base)	Weight	Footing
F1202040	3000mm	3088mm	1150mm	1086mm	130mm	1040kg	Freestanding No footing requirements

Please refer to **saferoads.com.au** for the most up to date specifications

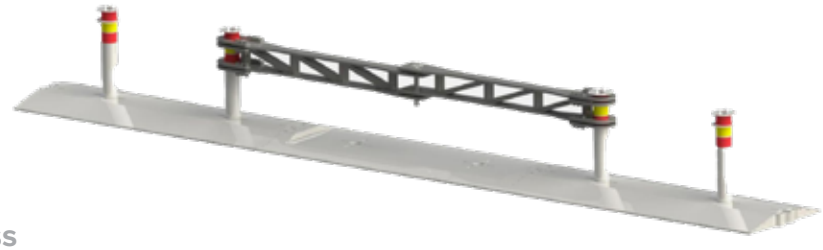

Rapid Stop Emergency Access

- Emergency Gate module can be placed between a minimum of two standard barriers, for a continuous barrier that has a 4.2m gate opening
- Keep pedestrian safety front of mind with the Rapid Stop Emergency Gate which will allow the swift entry and exit of large crowds whilst enabling the timely access of emergency vehicle as required

Gate Assembly Module Specifications

Product Code	Installed Length	Unit Width	Weight (Assembly)	Weight (Gate Arm Each)	Weight (Gate Retaining Pin)
F1202041	9000mm	1150mm	3900kg	230kg	7kg

Please refer to s**aferoads.com.au** for the most up to date specifications

saferoads

Security Bollards

Saferoads has been providing and improving public and road safety solutions for 30 years and security bollards play a huge role in this.

We have developed the highest quality road safety bollards to protect pedestrians, including our latest portable bollards which are ideal for temporary installation at events. OmniStop bollards meet the technical specifications required by government road authorities such as VicRoads and Transport for NSW.

Security Licence Number: 000110687

45
km/h

OmniStop Super Duty Bollard

Independently Crash Tested

Crash Tested | Energy Absorbing | Permanent

- Fully crash tested with a 2270kg vehicle at 50km/h
- Protects pedestrians, outdoor diners and assets
- Reduces the risk of injury to the vehicle's occupants
- Allows pedestrian flow
- Ease of installation and replacement post impact
- Available in a range of colours, white, yellow, black, grey, stainless steel or customised to suit your project

Crash Tested for Superior Protection

ASTM F3016

2270kg/5000lb vehicle at 50kmh/30mph

Vehicle stopped: Hatchback, Sedan, SUV, Pickup

Specifications

Product Code	Part	Diameter	Height	Weight	Footing
K1208000	Bollard	150mm/6in	1450mm/57in	94kg/207lbs	600Ø x 1800mm
	Sleeve	155mm/6.1in I.D 165mm/6.5in O.D	500mm/20in	117kg/258lbs Reo Cage and Sleeve	-
	Reo Cage	450mm/17in	1650mm/65in		-

Please refer to **saferoads.com.au** for the most up to date specifications. For a full list of product codes and colour options please visit the product page on the website.

sales@saferoads.com.au | 1800 060 672

OmniStop Ultra Bollard

Protection Without Restriction on Pedestrians

Crash Tested | Energy Absorbing | Permanent

- Fully crash tested with a 1600kg vehicle at 60km/h
- Approved for use by Department of Transport (VicRoads) and Transport for NSW up to 50km
- Protects pedestrians, outdoor diners and assets
- Reduces the risk of injury to the vehicle's occupants
- Allows pedestrian flow
- Ease of installation and replacement post impact
- Available in a range of colours, white, yellow, black, grey, stainless steel or customised to suit your project

Crash Tested for Superior Protection

1600kg/3500lb vehicle at 60kmh/38mph

Vehicle stopped: Hatchback, Sedan, SUV, Pickup

Specifications

Product Code	Part	Diameter	Height	Weight	Footing
K1202003	Bollard	150mm/6in	1450mm/57in	67.5kg/149lbs	700Ø x 1000mm
	Sleeve	155mm/6in I.D 165mm/6.5in O.D	500mm/20in	31kg/68lbs Reo Cage and Sleeve	-
	Reo Cage	550mm/21in	800mm/31in		-

Please refer to **saferoads.com.au** for the most up to date specifications. For a full list of product codes and colour options please visit the product page on the website.

Product Approvals

Saferoads Omnistop Ultra Bollard is approved for use by Department of Transport (Vic Roads) and Transport for NSW.

Inground Lockable Bollard

Heavy duty bollard

Lockable | Removable | 1 Year Warranty

- Available with rain cap and flat top options
- Galvanised Steel - Grade 250
- Powdercoated finish in safety yellow
- Custom colours available

Specifications

Product Code	Diameter	Diameter (Sleeve)	Height (Bollard)	Overall Height (with Sleeve)	Wall Thickness (Pole)	Sleeve Thickness	Cap
K1202109-RC	140mm	170mm	1000mm	1300mm	5mm	5mm	Rain Cap
K1202109-F	140mm	170mm	1000mm	1300mm	5mm	5mm	Flat Top
F1202109-F	140mm	170mm	1300mm	1600mm	5mm	5mm	Flat Top
K1202113-RC	90mm	120mm	1000mm	1300mm	5mm	5mm	Rain Cap

Please refer to **saferoads.com.au** for the most up to date specifications.

Surface Mount Lockable Bollard

Versatile Bollard

Lockable with Padlock | Removable | 1 Year Warranty

- Easily removable
- Can be padlocked for extra security
- Easy 10 minute install
- No destructive core drilling into paths or walkways
- Galvanised Steel - Grade 250
- Powdercoated finish in safety yellow

Specifications

Product Code	Diameter	Width (Base)	Height	Wall Thickness (Pole)	Cap	Base Plate
F1202110-P	140mm	250 x 300mm	1300mm	5mm	Flat Top	250 x 300mm diameter x 10mm thick, 4 mounting holes 18mm diameter

Please refer to **saferoads.com.au** for the most up to date specifications.

Surface Mount Bollard

Visual Deterrent

Surface Mounted | Permanent | 1 Year Warranty

- Available with rain cap and flat top options
- Galvanised Steel - Grade 250
- Powdercoated finish in safety yellow
- Custom colours available

Specifications

Product Code	Diameter	Width (Base)	Height	Wall Thickness (Pole)	Cap	Base Plate
F1202114-FP	140mm	250x250mm	1000mm	5mm	Flat Top	250mm diameter x 12mm thick, 4 mounting holes 18mm diameter
F1202101-RC	140mm	250x250mm	1000mm	5mm	Rain Cap	
F1202107-FP	140mm	250x250mm	1300mm	5mm	Flat Top	
F1202107-RC	140mm	250x250mm	1300mm	5mm	Rain Cap	
F1202189	90mm	250x250mm	1000mm	5mm	Rain Cap	

Please refer to **saferoads.com.au** for the most up to date specifications.

saferoads

Guide Posts

Saferoads began 30 years ago with the invention of our rubber hinge guide post. During this time, we have developed a range of guide post options designed to meet different needs.

You can be sure that no one knows guide posts as well as we do.

SupaSteel Guide Post

Can be Re-straightened After Vehicle Impacts

5 Year Warranty

Steel

- The SupaSteel Guide Post is the strongest semi-flexible steel post available
- Can be re-straightened over 15 times after multiple vehicle impacts and remain rigid
- Reflective Class 1A Delineator. 50 x 200mm rectangle
- Easy to install - sharpest point of any steel guide post, aiding the installation process
- Ideal for installation in all ground types
- Will drive straight into bitumen and chip seal surfaces
- 5 year product warranty

Specifications

Product Code	Width	Height	Thickness	Weight	Installation	Mount
F1102140	100mm	1350mm	1.6mm	2kg	Manually or with power drivers	Steel

Please refer to **saferoads.com.au** for the most up to date specifications

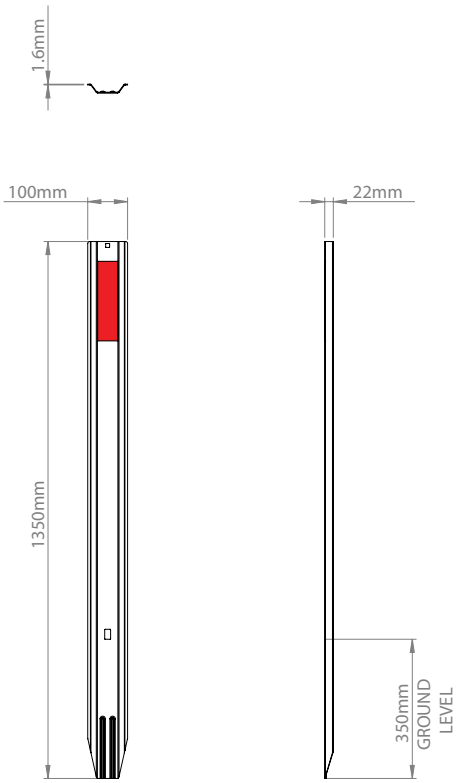

sales@saferoads.com.au | 1800 060 672

Saferoads offer industry expertise and the best products available worldwide

saferoads.com.au

SnapLoc Guide Post

Fast, Easy Install and Superior Durability

5 Year Warranty

Self Corrects When Hit

- Rebounds after vehicle impact
- Recessed Class 1A delineator, 50 x 200mm rectangle
- Ultimate in durability, withstands multiple impacts
- Will outlast competitors - does not shatter or crack
- Easy to install with a jackhammer
- Unique urethane hinge will bend and self correct the post when impacted from any direction
- 5 year product warranty

Two Piece

- Easily removable with tool
- Offers multiple options for ground mounting
- Wheel over surface mount option
- Galvanised steel bridge mount

One Piece

- Star picket one piece socket

Specifications

Product Code	Width	Height	Thickness	Weight	Installation	Mount	Hinge
Two Piece K1102007	115mm	1000mm	30mm	1.5kg with ground socket (315mm)	Under 30 Seconds	Multiple Mount Options Available	Durable, 100% Urethane
One Piece F1102135				1.6kg with star picket socket		Star Picket One Piece Socket	

Please refer to **saferoads.com.au** for the most up to date specifications

sales@saferoads.com.au | 1800 060 672

SnapLoc Guide Post

Mounting Options

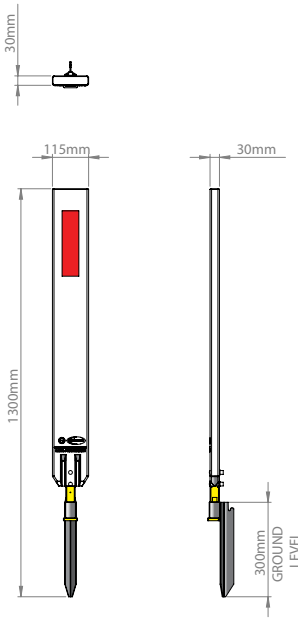

One Piece
Star Picket Socket

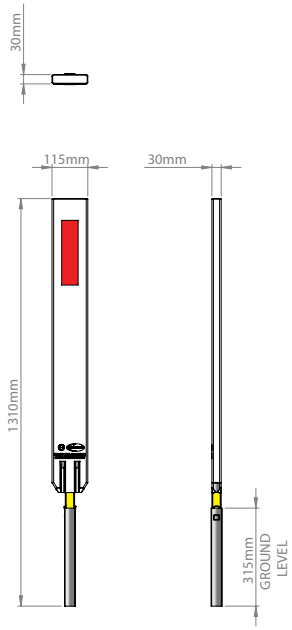

Two Piece
Ground Socket

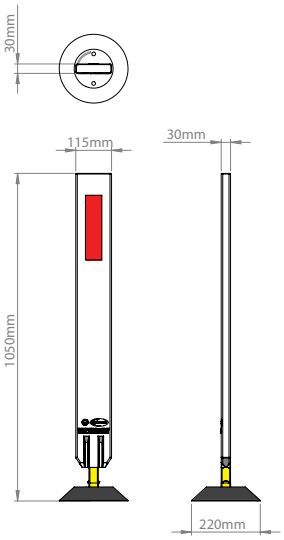

Two Piece
Surface Mount Base

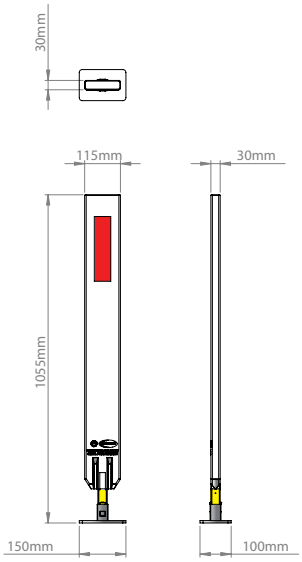

Two Piece
Bridge Mount Base

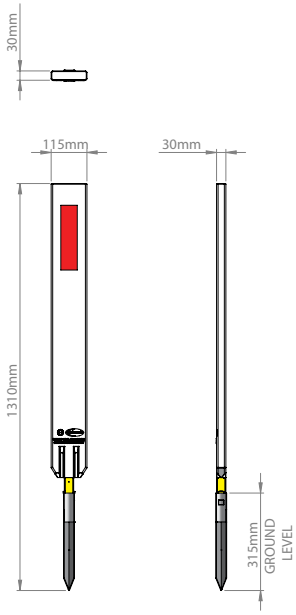

Two Piece
Spike Base

Product Approvals

Saferoads SnapLoc Guide Post is approved for use by Department of Transport (Vic Roads), Transport for NSW, Department for Infrastructure and Transport SA, Department of Main Roads QLD, Main Roads WA

171 YIS

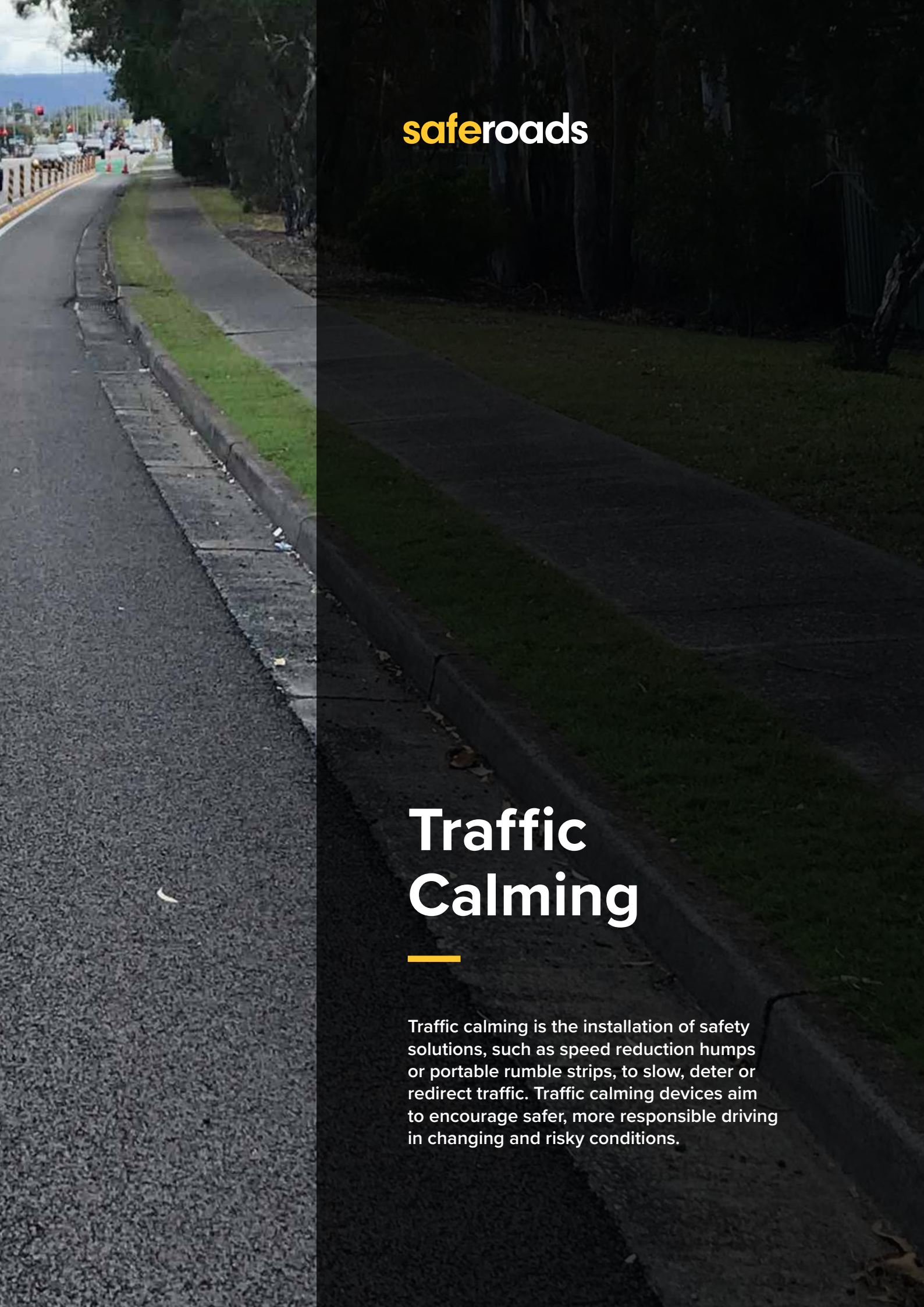

saferoads

Traffic Calming

Traffic calming is the installation of safety solutions, such as speed reduction humps or portable rumble strips, to slow, deter or redirect traffic. Traffic calming devices aim to encourage safer, more responsible driving in changing and risky conditions.

Separation Kerb

Redirect Or Separate Traffic With Ease

2 Year Warranty

Black or Yellow

- Designed to delineate, re-direct or separate traffic
- Manufactured with recycled rubber and EPDM rubber for superior durability
- Available in highly visible yellow or black with recessed reflective stickers
- Unique interlink design allows segments to work around curves
- Can be fastened for permanent applications or u-bolted together for temporary applications
- The flexible nature of Separation Kerb allows for a positive grip onto the pavement
- Contours to the road surface
- Does not need excessive road width or expensive excavation
- Separation Kerb posts can be added to provide additional delineation
- Available with road traffic control signage to suit many applications

Specifications

Segment	Product Code Yellow	Product Code Black	Effective Length	Width	Height	Weight
Intermediate	K1401785	K1401780	1500mm	265mm	95mm	29.5KG
Male End	K1401786	K1401781	1200mm	265mm	95mm	24KG
Female End	K1401787	K1401782	1460mm	265mm	95mm	24KG
Single	K1401788	K1401783	1000mm	265mm	95mm	18KG

Please refer to **saferoads.com.au** for the most up to date specifications

Accessories

Removal Tool
F1102120

Joining Bracket
(used for install instead of fasteners) F1401754

Separation Kerb Post
F140175

sales@saferoads.com.au | 1800 060 672

Rumble Bars

A Visual and Audible Warning to Drivers

2 Year Warranty

- Surface mounted units that provide a visual and audible warning to motorists
- Alert of hazardous/unexpected traffic conditions ahead
- Easily installed - can be bolted or epoxied in place
- Manufactured with recycled rubber and EPDM rubber
- Heavy duty and built to last. Does not chip or crack like concrete
- Two profiles available: 25mm and 50mm in yellow colour with a checker plate finish

Specifications

Profile	Product Code	Length	Width	Height	Weight	Colour	Finish
Low Profile	K10402050	385mm	200mm	25mm	2kg	Yellow	Checker Plate
High Profile	K1402054	385mm	200mm	50mm	3kg	Yellow	Checker Plate

Please refer to **saferoads.com.au** for the most up to date specifications

Caterpillar Safe Cycle

Alerts Drivers to Avoid Bike Lanes

2 Year Warranty

- Visibly and audibly engages drivers to avoid bike lanes protecting cyclists
- Manufactured with recycled rubber and EPDM rubber
- Safer for cyclists and motorists, with lower impact contour compared with other options on the market
- End caps built into the island design, so it can curve with roads as required
- Able to head in any direction without time consuming and unattractive joiners, due to spacing of 300mm between sections of Caterpillar

Specifications

Product Code	Length	Width	Height	Weight
K1404000	1000mm	150mm	35mm	3.76kg

Please refer to **saferoads.com.au** for the most up to date specifications

sales@saferoads.com.au | 1800 060 672

Rubber Wheel Stop

Durable and Installed in Minutes

2 Year Warranty

- No more damaged vehicles
- Will not dislodge or crack
- Increased safety for motorists and pedestrians
- Manufactured from recycled rubber
- Reflective yellow markings for better visibility
- Durable and installed in minutes - no OH&S issues
- Cost effective alternative to asphalt or concrete
- 4 fixing points rather than industry standard of 3 to provide greater lifespan and rigidity
- Ready for immediate use

Specifications

Product Code	Length	Width	Height	Weight	Colour
K1402000	1650mm	150mm	100mm	15kg	Black & Yellow

Please refer to **saferoads.com.au** for the most up to date specifications

Rubber Speed Humps

Durable Solution To Slow Drivers Down

2 Year Warranty

- Engages the driver to reduce speed
- Manufactured with recycled rubber
- Highly visible, durable and built to last
- Cost effective alternative to asphalt or concrete
- Cable/hose protector for temporary applications
- Extra fasteners to prevent dislodging or cracking
- 75mm model complies with Australian Standards
- 50mm model minimises driver discomfort
- Ready for immediate use, installed in minutes with minimal disruptions

Specifications

	Product Code	Colour	Length	Width	Height	Weight
Low Profile (50mm) Designed to reduce speed to 20km/h or less						
50mm Intermediate	K1401954	Black	500mm	350mm	50mm	6.5kg
	K1401958	Yellow	500mm	350mm	50mm	6.5kg
50mm End Cap	K1401955	Black	500mm	350mm	50mm	7kg
	K1401956	Yellow	500mm	350mm	50mm	7kg
Australian Standards Compliant (75mm) Designed to reduce speed to 5km/h or less						
75mm Intermediate	K1402708	Black	500mm	400mm	75mm	11.5kg
	K1402710	Yellow	500mm	400mm	75mm	11.5kg
75mm End Cap	K1402709	Black	500mm	400mm	75mm	10.5kg
	K1402711	Yellow	500mm	400mm	75mm	10.5kg

Please refer to **saferoads.com.au** for the most up to date specifications

sales@saferoads.com.au | 1800 060 672

Rubber Speed Cushions

Reduce Speed, Accidents and Noise

2 Year Warranty

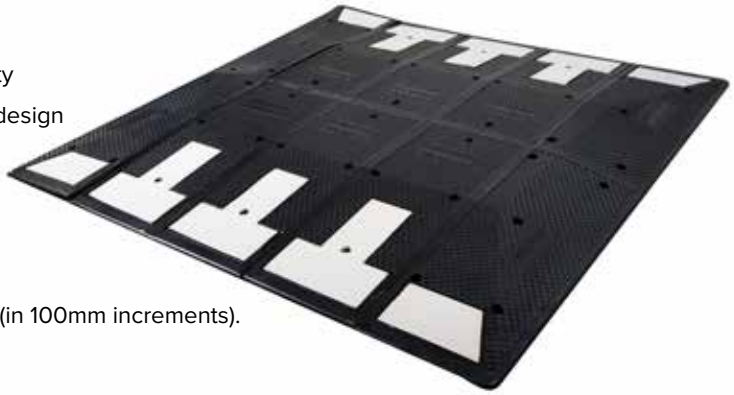

- Engages the driver to reduce speed
- Unique modular design offering high levels of flexibility
- Will suit any road - various widths allow for a tailored design
- Minimal impact to buses, emergency vehicles
- Minimal driver discomfort
- Durable product manufactured from recycled rubber
- Ability to remove and relocate if required
- Width can be custom designed to any size above 2m (in 100mm increments). Contact Saferoads for further information

Specifications

Product Code	Length	Width	Height	Colour
K1401300	2m	1.6m	75mm	Black & White
K1401301	2m	1.7m	75mm	Black & White
K1401302	2m	1.8m	75mm	Black & White
K1401303	2m	1.9m	75mm	Black & White
K1402122	2m	2m	75mm	Black & White

Please refer to **saferoads.com.au** for the most up to date specifications

Rubber Kerbing

Quick to Install, Durable and Cost Effective

2 Year Warranty

- Absorbs vehicle impacts
- Made with white EPDM rubber
- Does not crack, chip or breakaway
- Quick to install and easy to remove if required
- Cost effective and maintenance free - providing medium to long term traffic management
- Unlike concrete kerbing, rubber kerbing is resistant to greying from road grime over time and does not require constant maintenance to maintain its visibility
- Can be custom made to suit your requirements. Contact Saferoads for further information

Specifications

Product Code	Length	Width	Height	Weight	Colour	Radius
Semi-Mountable	1.0m	230mm	125mm	16.5kg	White	300, 600 & 1200mm
Semi-Barrier	1.0m	150mm	150mm	15.5kg	White	300, 600 & 1200mm

Please refer to **saferoads.com.au** for the most up to date specifications

Cross Sections

Please note: Cross sections are twice the scale for clarity

Mountable

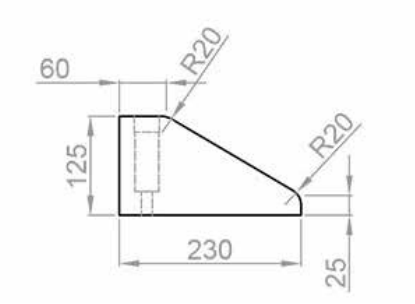

Barrier

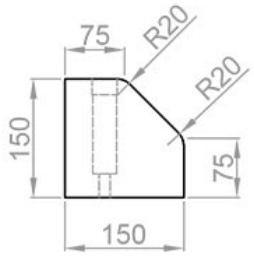

Standard Pieces

Pieces can be cut to suit your design

Mountable

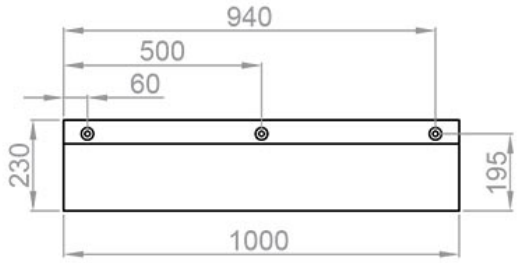

Barrier

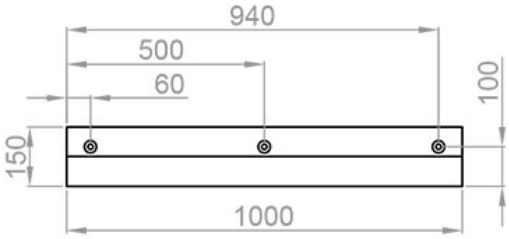

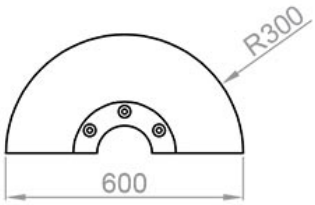

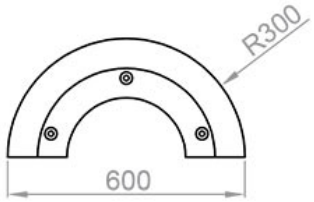

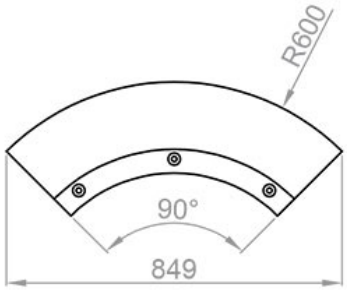

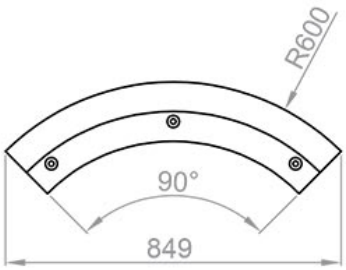

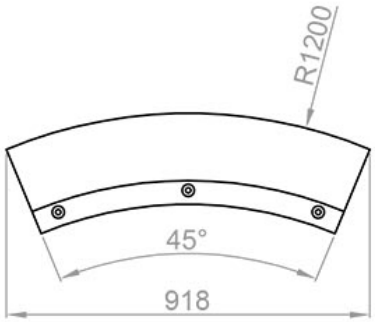

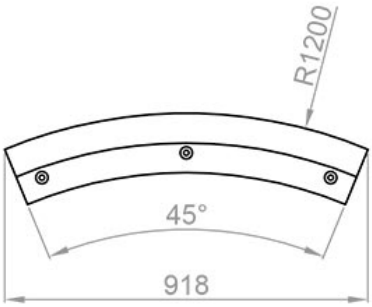

Kangou Sign

Impact Resistant Signage

5 Year Warranty

- 360 degree impact resistant
- Withstands multiple impacts - extensively tested with a 40 tonne truck including wheel over impacts
- Integrated sign face
- Durable polyurethane hinge
- Customised decals that can be replaced
- Available in two profiles
- Decals can be replaced

Specifications

Product Code	Width	Height	Weight	Top	Sign Face	Decal	Hinge	Colour
F1104011	190mm	1355mm	7.3kg	Medium Density Polyethylene	150 x 1150mm	Class 1A Delineator	Injection Moulded Polyurethane	Grey
F1104010	490mm	1070mm	12kg	Medium Density Polyethylene	450 x 600mm	Class 1A Delineator	Injection Moulded Polyurethane	Grey

Please refer to **saferoads.com.au** for the most up to date specifications

Roll Out Speed Hump

Portable and Quick to Deploy

1 Year Warranty

- Slow down vehicle traffic through road work zones
- Lightweight and portable - can be carried and set up in an instant
- Robust - stands up to cars and trucks (at low speeds)
- Does not require anchoring
- No glue or fixings required for installation
- Stowed in purpose designed bag with carry handles

Specifications

Product Code	Length	Width	Height	Weight	Colour
F1402700	3120mm	220mm	40mm	15kg	Black and Yellow

Please refer to **saferoads.com.au** for the most up to date specifications

NOTES

| Driven by Innovation |

Servicing Australia | New Zealand | North America | Europe | Asia

1800 060 672
sales@saferoads.com.au

saferoads.com.au

OCT_2026